epic PARTY TEAM

ARCADES & GAMES BRANDING GUIDES

LED CORNHOLE BRANDING GUIDE

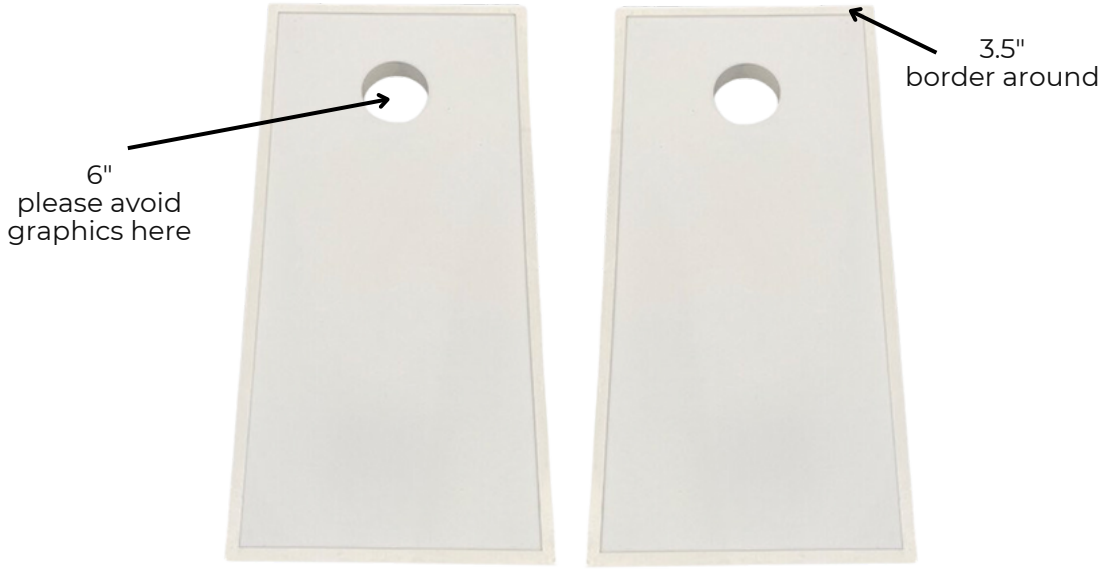

BOARD X2

2' W X 4' T
$250

THINGS TO KNOW

All grayscale and color art should be 300 DPI

Vector art saved as .EPS (fonts & images embedded or supplied)

We accept: Adobe PDF (fonts embedded) & Illustrator (EPS or AI) files

Web and low resolution images are not suitable

Please note: When sending multiple files they need to be seperated by page.

(623) 344-3588 | epicpartyteam.com |info@epicpartyteam.com

WOOD CORBHOLE SET BRANDING GUIDE

BOARDS X2

24" W X 48" T
$200

THINGS TO KNOW

All grayscale and color art should be 300 DPI

Vector art saved as .EPS (fonts & images embedded or supplied)

We accept: Adobe PDF (fonts embedded) & Illustrator (EPS or AI) files

Web and low resolution images are not suitable

Please note: When sending multiple files they need to be seperated by page.

(623) 344-3588 | epicpartyteam.com |info@epicpartyteam.com

NBA GAMETIME BRANDING GUIDE

1

RIGHT SIDE

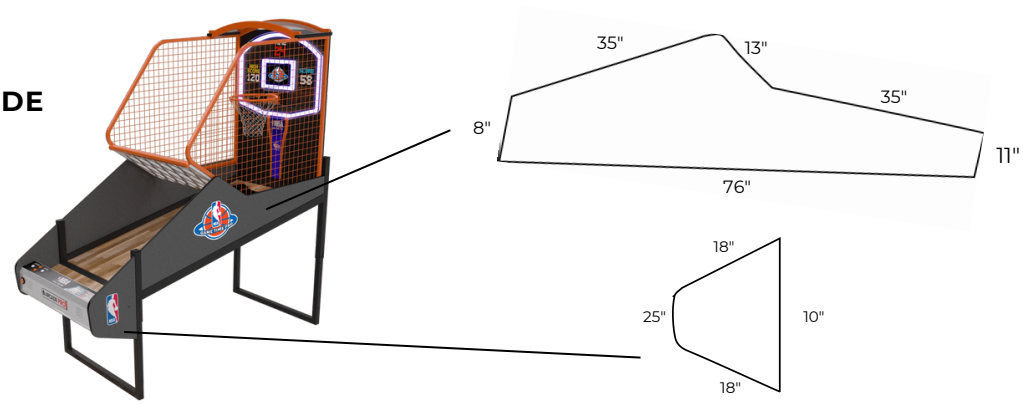

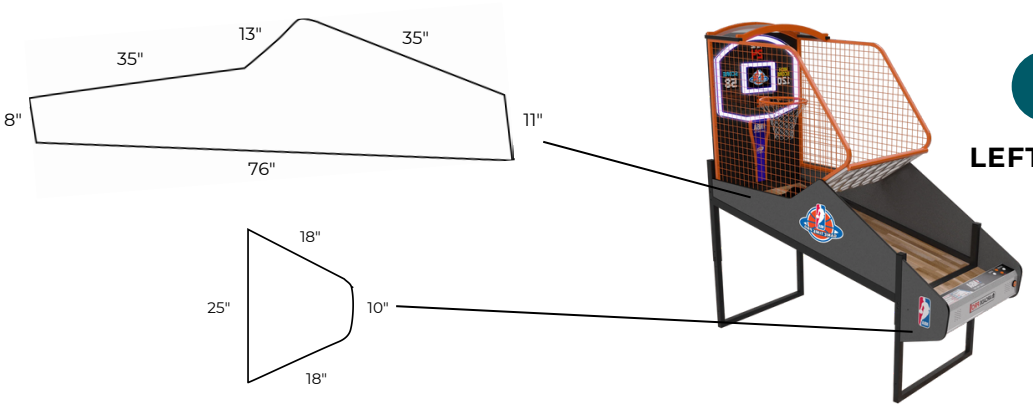

2

LEFT SIDE

1

RIGHT PANEL

Measurements above $400

2

LEFT PANEL

Measurements above $400

THINGS TO KNOW

All grayscale and color art should be 300 DPI

Vector art saved as .EPS (fonts & images embedded or supplied)

We accept: Adobe PDF (fonts embedded) & Illustrator (EPS or AI) files

Web and low resolution images are not suitable

Please note: When sending multiple files they need to be seperated by page.

(623) 344-3588 | epicpartyteam.com |info@epicpartyteam.com

FOOSBALL TABLE BRANDING GUIDE

1

LONG SIDE x2

47.125" W X 5.75" T

2

END SIDE x2

27.625" W X 10.25" T

$250 ALL SIDES

THINGS TO KNOW

All grayscale and color art should be 300 DPI

Vector art saved as .EPS (fonts & images embedded or supplied)

We accept: Adobe PDF (fonts embedded) & Illustrator (EPS or AI) files

Web and low resolution images are not suitable

Please note: When sending multiple files they need to be seperated by page.

(623) 344-3588 | epicpartyteam.com |info@epicpartyteam.com

PING PONG TABLE BRANDING GUIDE

1

TOP - BOTH SIDES

48" W X 48" T
$500

THINGS TO KNOW

All grayscale and color art should be 300 DPI

Vector art saved as .EPS (fonts & images embedded or supplied)

We accept: Adobe PDF (fonts embedded) & Illustrator (EPS or AI) files

Web and low resolution images are not suitable

Please note: When sending multiple files they need to be seperated by page.

(623) 344-3588 | epicpartyteam.com |info@epicpartyteam.com

GLOWING SHUFFLE BOARD BRANDING GUIDE

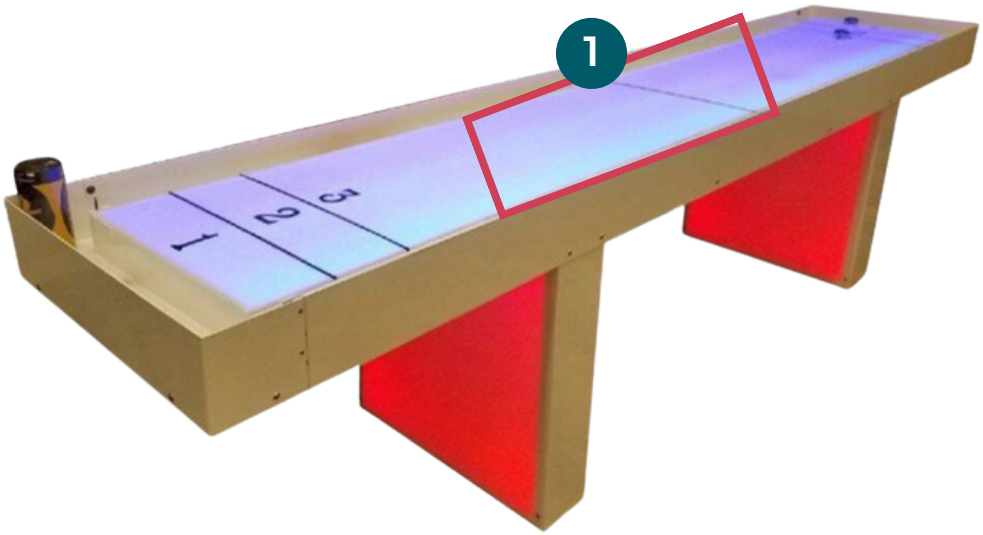

1

CENTER LANE

85" W X 20" T
$250

THINGS TO KNOW

All grayscale and color art should be 300 DPI

Vector art saved as .EPS (fonts & images embedded or supplied)

We accept: Adobe PDF (fonts embedded) & Illustrator (EPS or AI) files

Web and low resolution images are not suitable

Please note: When sending multiple files they need to be seperated by page.

(623) 344-3588 | epicpartyteam.com |info@epicpartyteam.com

LED PING PONG TABLE BRANDING GUIDE

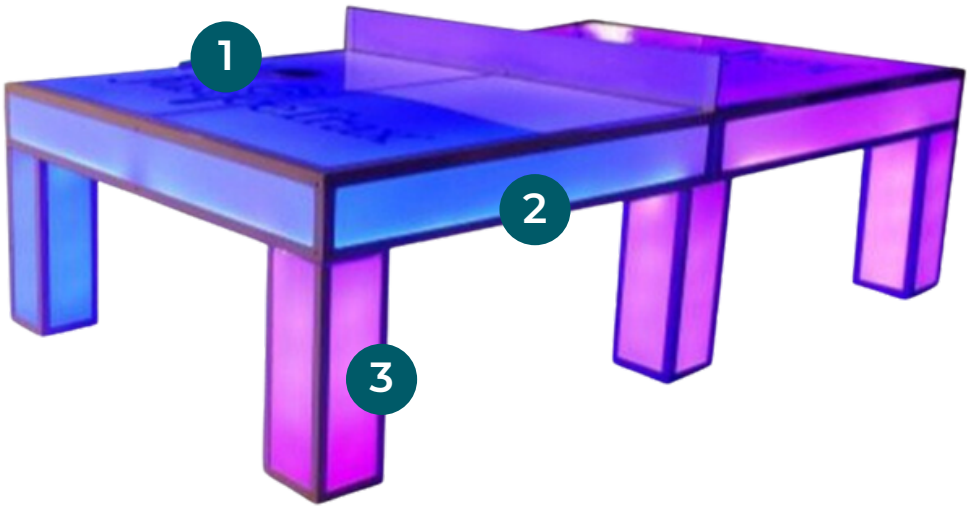

FULL BRAND OPTION
$830

1
TOP ONLY OPTION
48" W X 48" T
$500

2
SIDES X6
57" W x 5.5" T

3
LEGS X6
5" W x 21" T

THINGS TO KNOW

All grayscale and color art should be 300 DPI

Vector art saved as .EPS (fonts & images embedded or supplied)

We accept: Adobe PDF (fonts embedded) & Illustrator (EPS or AI) files

Web and low resolution images are not suitable

Please note: When sending multiple files they need to be seperated by page.

(623) 344-3588 | epicpartyteam.com |info@epicpartyteam.com

HYPER SHOOT BRANDING GUIDE

1

SIDE PANEL X2

28" W X 35" T
$400/per side

THINGS TO KNOW

All grayscale and color art should be 300 DPI

Vector art saved as .EPS (fonts & images embedded or supplied)

We accept: Adobe PDF (fonts embedded) & Illustrator (EPS or AI) files

Web and low resolution images are not suitable

Please note: When sending multiple files they need to be seperated by page.

(623) 344-3588 | epicpartyteam.com |info@epicpartyteam.com